MODELLO FAS
MODEL FAS

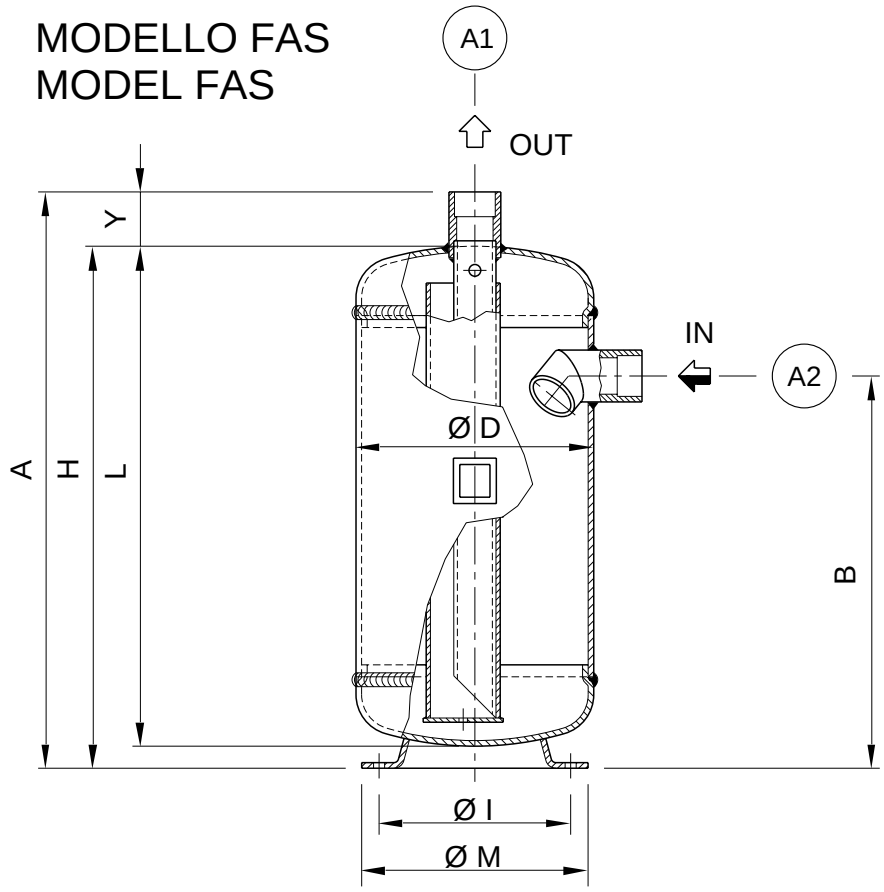

PER CAT. III / IV
FOR CAT. III / IV

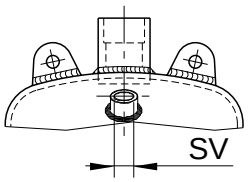

SOLO PER FAS 4.5.16 - FAS 7.19
ONLY FOR FAS 4.5.16 - FAS 7.19

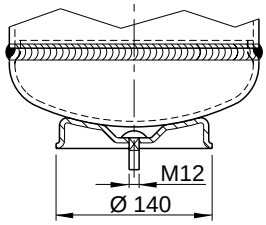

MODELLO FAS+W
MODEL FAS+W

W= SCAMBIATORE
W= HEAT EXCHANGER

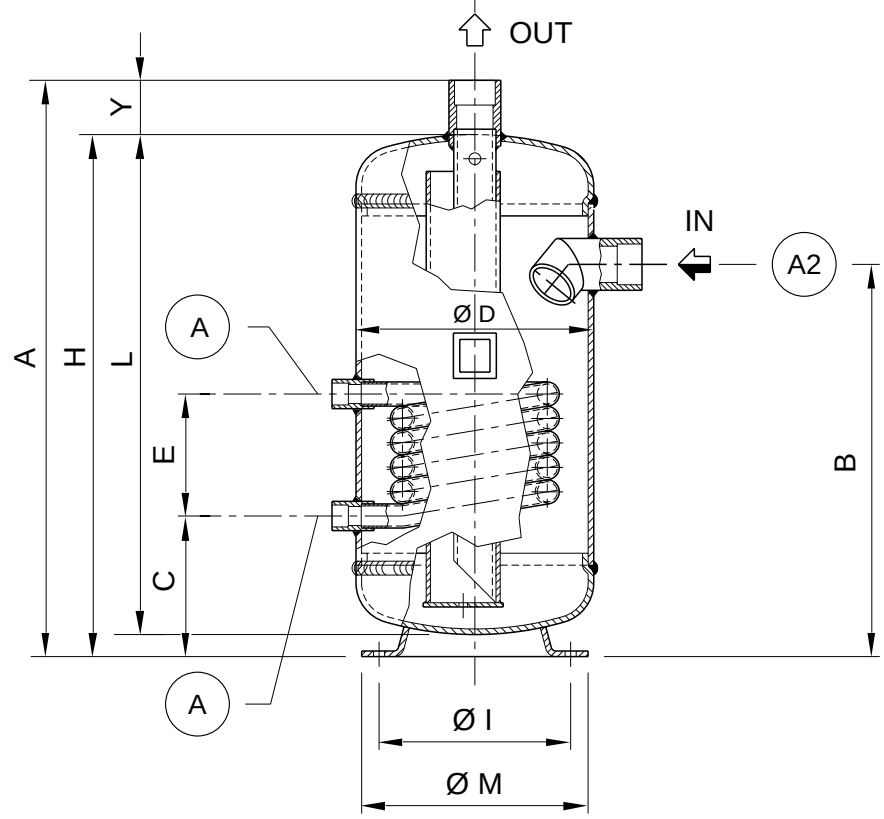

ETICHETTA PER CAT. I
LABEL FOR CAT. I

LEGNAGO VERONA-Italy I-37045	CE
Type:	
Manufacture- Nr.	
Manufacture year	
Fluids Group	Escluded
Category	Volume V:L
Temperature TS- C	
Max.Permissible pressure PS-bar:	
Test pressure PT-bar:	

ETICHETTA PER CAT. II
LABEL FOR CAT. II

LEGNAGO VERONA-Italy I-37045	CE 0036
Type:	
Manufacture- Nr.	
Manufacture year	
Fluids Group	Escluded
Category	Volume V:L
Temperature TS- C	
Max.Permissible pressure PS-bar:	
Test pressure PT-bar:	

TARGHETTA PER CAT. III / IV
NAME PLATE FOR CAT. III / IV

LEGNAGO VERONA-ITALY I - 37045	CE 0036
Tipo: Type: Type:	
Fabbricazione- Manufacture- Fabrication- Nr.	
Anno di Fabbricazione Manufacture year Année de fabrication	
Volume Volume Volume V: L	
Temperatura Temperature TS- C Température	min: max:
Pressione massima consentita Max.Permissible pressure Max.Pression admissible	PS-bar:
Pressione di collaudo Test pressure Pression d'essai	PT-bar: Escluso Excluded Exclu
Gruppo Fluidi/Fluids Group/Groupe fluides	
Categoria/Category/Catégorie	

NOTES: According to the law in force, any text or graphic reproduction of this catalogue, even partial, is strictly prohibited. N.B. A norma di legge il presente catalogo non puo' essere riprodotto nei testi e nelle rappresentazioni grafiche da ditte concorrenti.

La ditta allo scopo di migliorare la propria produzione si riserva il diritto di apportare modifiche senza preavviso. *The Company to improve production reserves the right of modifying without notice.* 09/12

NOTA: I dati riportati nel presente catalogo non costituiscono documenti contrattuali. *NOTE: Data indicated on the present catalogue are not contractually binding.*

12CG32 N.B. A norma di legge il presente catalogo non puo' essere riprodotto nei testi e nelle rappresentazioni grafiche da ditte concorrenti. *NOTES: According to the law in force, any text or graphic reproduction of this catalogue, even partial, is strictly prohibited.*

FRIGO MEC S.p.A

COSTRUZIONE COMPONENTI PER LA REFRIGERAZIONE ED IL CONDIZIONAMENTO
COMPONENTS MANUFACTURING FOR REFRIGERATION AND AIR CONDITIONING

SEPARATORI DI LIQUIDO CON SCAMBIATORE CAT. I - II - III - IV / HEAT EXCHANGER SUCTION ACCUMULATORS CAT. I - II - III - IV

FLÜSSIGKEITS-ABSCHEIDER WÄRMEAUSTAUSCHER CAT. I - II - III - IV / BOUTEILLES TAMPON ÉCHANGEUR CAT. I - II - III - IV

TABELLA A/TABLE A: DATI TECNICI, TECHNICAL DATA - SERIE: **PS = 25 bar**

Temperatura/Temperature TS- C	Min. -10 Max.+120	Min. -50 Max.+120	Pressione di collaudo/Test pressure **PT**
Pressione max. consentita/Max permissible pressure **PS**-bar	25	18	**PT**-bar: **35.75** (25x1.43)

Refrigeranti/Refrigerants: R22,R502,R134a,R401A,R401B,R402A,R402B,R404A,R407C,R507 e altri/ and other ones

CAT.	TIPO TYPE MODELLO	VOLUME (Liter)	CONNESSIONI/ CONNECTIONS A1/A2 I	II	III	IV	V	VI	VII	A ODS	SV	DIMENSIONI (mm) (±3%) / DIMENSIONS D	L	A max	B max	C	~E	H	I	M	Y
I	FAS 4,5.16	4.5	ODS 22	ODS 28	/	/	/	/	/	/	1/4" NPT	159	280	337	209	/	/	302	/	/	35
	FAS 7.19	7			ODS 35	/	/	/	/	/	A RICHIESTA / ON REQUEST	193.7	300	362	212	/	/	322	/	/	35÷40
II	FAS 12.21(+W)	12	ODS 22	ODS 28	ODS 35	ODS 42	/	/	/	ODS 16	1/2" NPT	219.1	382	437	282	140	80	397	204	230	35÷40
	FAS 15.21(+W)	15					/	/	/				475	530	375			490	204	230	35÷40
	FAS 20.21(+W)	20					/	/	/				630	685	530		100	645	204	230	35÷40
	FAS 25.21(+W)	25	ODS 22	ODS 28	ODS 35	ODS 42	ODS 54	/	/				790	855	690			805	204	230	35÷50
	FAS 25.27(+W)											273	502	570	380			520	220	260	35÷50
	FAS 30.21(+W)	30								ODS 18		219.1	910	975	810			925	204	230	35÷50
	FAS 30.27(+W)		ODS 28	ODS 35	ODS 42	ODS 54	ODS 64	ODS 67	/			273	594	682	472			612	220	260	35÷70
	FAS 35.21(+W)	35					/	/	/			219.1	1062	1130	962			1077	204	230	35÷50
	FAS 35.27(+W)						ODS 64	ODS 67	/	ODS 22		273	686	774	564			704	220	260	35÷70
III	FAS 45.27(+W)	45	ODS 35	ODS 42	ODS 54	ODS 64	ODS 67	ODS 70	ODS 76	ODS 22	1/2" NPT	273	870	958	742	140	130	888	220	260	40÷70
	FAS 45.32(+W)											323.9	646	746	511	165		676	280	320	40÷70
	FAS 60.27(+W)	60	ODS 42	ODS 54	ODS 64	ODS 67	ODS 70	ODS 76	/			273	1147	1238	1019	140		1165	220	260	40÷73
	FAS 60.32(+W)								ODS 80			323.9	846	949	711	165		876	280	320	40÷73
	FAS 60.35(+W)											355.6	718	804	541	180		731	355	410	40÷73
	FAS 80.27(+W)	80	ODS 54	ODS 64	ODS 67	ODS 70	ODS 76	ODS 80	OD 88.9			273	1515	1606	1387	140		1533	220	260	50÷73
	FAS 80.32(+W)									ODS 28		323.9	1113	1216	978	165		1143	280	320	50÷73
	FAS 80.35(+W)											355.6	940	1026	763	180		953	355	410	50÷73
	FAS 100.32(+W)	100									1" NPT	323.9	1380	1483	1245	165	130	1410	280	320	50÷73
	FAS 100.35(+W)											355.6	1162	1248	985	180		1175	355	410	50÷73
IV	FAS 125.40(+W)	125	ODS 64	ODS 67	ODS 70	ODS 76	ODS 80	OD 88,9	OD 114.3	ODS 35		406.4	1115	1205	932	200	160	1132	355	410	70÷73
	FAS 150.40(+W)	150											1327	1417	1144			1344	355	410	70÷73

TABELLA B/TABLE B: DATI TECNICI, TECHNICAL DATA - SERIE: **PS = 31 bar** — **SERIE PER R410A / SERIES FOR R410A**

Temperatura/Temperature TS- C	Min. -10 Max.+120	Min. -50 Max.+120	Pressione di collaudo/Test pressure **PT**
Pressione max. consentita/Max permissible pressure **PS**-bar	31	23	**PT**-bar: **44.33** (31x1.43)

Refrigeranti/Refrigerants: R22,R502,R134a,R401A,R401B,R402A,R402B,R404A,R407C,R410A,R507 e altri/ and other ones

CAT.	TIPO TYPE MODELLO	VOLUME (Liter)	CONNESSIONI/ CONNECTIONS A1/A2 I	II	III	IV	V	VI	VII	A ODS	SV	DIMENSIONI (mm) (±3%) / DIMENSIONS D	L	A max	B max	C	~E	H	I	M	Y
I	FAS 4,5.16	4.5	ODS 22	ODS 28	/	/	/	/	/	/	1/4" NPT	159	280	337	209	/	/	302	/	/	35
	FAS 7.19	7	ODS 22	ODS 28	ODS 35	/	/	/	/	/	A RICHIESTA / ON REQUEST	193.7	300	362	212	/	/	322	/	/	35÷40
II	FAS 12.21(+W)	12	ODS 22	ODS 28	ODS 35	ODS 42	/	/	/	ODS 16	1/2" NPT	219.1	382	437	282	140	80	397	204	230	35÷40
	FAS 15.21(+W)	15					/	/	/				475	530	375			490	204	230	35÷40
	FAS 20.21(+W)	20					/	/	/				630	685	530		100	645	204	230	35÷40
	FAS 25.21(+W)	25	ODS 22	ODS 28	ODS 35	ODS 42	ODS 54	/	/				790	855	690			805	204	230	35÷50
	FAS 25.27(+W)											273	502	570	380			520	220	260	35÷50
	FAS 30.21(+W)	30								ODS 18		219.1	910	975	810			925	204	230	35÷50
	FAS 30.27(+W)		ODS 28	ODS 35	ODS 42	ODS 54	ODS 64	ODS 67	/			273	594	682	472			612	220	260	35÷70
III	FAS 35.21(+W)	35	ODS 28	ODS 35	ODS 42	ODS 54	/	/	/	ODS 18	1/2" NPT	219.1	1062	1130	962	140	100	1077	204	230	35÷50
	FAS 35.27(+W)						ODS 64	ODS 67	/	ODS 22		273	686	774	564			704	220	260	35÷70
	FAS 45.27(+W)	45	ODS 35	ODS 42	ODS 54	ODS 64	ODS 67	ODS 70	ODS 76				870	958	742			888	220	260	40÷70
	FAS 45.32(+W)											323.9	646	746	511	165	130	676	280	320	40÷70
	FAS 60.27(+W)	60	ODS 42	ODS 54	ODS 64	ODS 67	ODS 70	ODS 76	/			273	1147	1238	1019	140		1165	220	260	40÷73
	FAS 60.32(+W)								ODS 80			323.9	846	949	711	165		876	280	320	40÷73
	FAS 60.35(+W)											355.6	718	804	541	180		731	355	410	40÷73
	FAS 80.27(+W)	80	ODS 54	ODS 64	ODS 67	ODS 70	ODS 76	ODS 80	OD 88.9			273	1515	1606	1387	140		1533	220	260	50÷73
	FAS 80.32(+W)									ODS 28		323.9	1113	1216	978	165		1143	280	320	50÷73
	FAS 80.35(+W)											355.6	940	1026	763	180		953	355	410	50÷73
IV	FAS 100.32(+W)	100	ODS 54	ODS 64	ODS 67	ODS 70	ODS 76	ODS 80	OD 88.9	ODS 28	1" NPT	323.9	1380	1483	1245	165	130	1410	280	320	50÷73
	FAS 100.35(+W)											355.6	1162	1248	985	180		1175	355	410	50÷73
	FAS 125.40(+W)	125	ODS 64	ODS 67	ODS 70	ODS 76	ODS 80	OD 88,9	OD 114.3	ODS 35		406.4	1115	1205	932	200	160	1132	355	410	70÷73
	FAS 150.40(+W)	150											1327	1417	1144			1344	355	410	70÷73

TABELLA C/TABLE C: DATI TECNICI, TECHNICAL DATA - SERIE: **PS = 34 bar** — **SERIE PER R410A / SERIES FOR R410A**

Temperatura/Temperature TS- C	Min. -10 Max.+120	Min. -50 Max.+120	Pressione di collaudo/Test pressure **PT**
Pressione max. consentita/Max permissible pressure **PS**-bar	34	25	**PT**-bar: **48.62** (34x1.43)

Refrigeranti/Refrigerants: R22,R502,R134a,R401A,R401B,R402A,R402B,R404A,R407C,R410A,R507 e altri/ and other ones

CAT.	TIPO TYPE MODELLO	VOLUME (Liter)	CONNESSIONI/ CONNECTIONS A1/A2 I	II	III	IV	V	VI	VII	A ODS	SV	DIMENSIONI (mm) (±3%) / DIMENSIONS D	L	A max	B max	C	~E	H	I	M	Y
I	FAS 4,5.16	4.5	ODS 22	ODS 28	/	/	/	/	/	/	1/4" NPT	159	280	337	209	/	/	302	/	/	35
	FAS 7.19	7	ODS 22	ODS 28	ODS 35	/	/	/	/	/	A RICHIESTA / ON REQUEST	193.7	300	362	212	/	/	322	/	/	35÷40
II	FAS 12.21(+W)	12	ODS 22	ODS 28	ODS 35	ODS 42	/	/	/	ODS 16	1/2" NPT	219.1	382	437	282	140	80	397	204	230	35÷40
	FAS 15.21(+W)	15					/	/	/				475	530	375			490	204	230	35÷40
	FAS 20.21(+W)	20					/	/	/				630	685	530		100	645	204	230	35÷40
	FAS 25.21(+W)	25	ODS 28	ODS 22	ODS 35	ODS 42	ODS 54	/	/				790	855	690			805	204	230	35÷50
	FAS 25.27(+W)											273	502	570	380			520	220	260	35÷50
	FAS 30.21(+W)	30	ODS 22	ODS 28	ODS 35	ODS 42	ODS 54	/	/	ODS 18		219.1	910	975	810			925	204	230	35÷50
	FAS 30.27(+W)		ODS 28	ODS 35	ODS 42	ODS 54	ODS 64	ODS 67	/			273	594	682	472			612	220	260	35÷70
III	FAS 35.21(+W)	35	ODS 28	ODS 35	ODS 42	ODS 54	/	/	/	ODS 18	1/2" NPT	219.1	1062	1130	962	140	100	1077	204	230	35÷50
	FAS 35.27(+W)						ODS 64	ODS 67	/			273	686	774	564			704	220	260	35÷70
	FAS 45.27(+W)	45	ODS 35	ODS 42	ODS 54	ODS 64	ODS 67	ODS 70	ODS 76				870	958	742			888	220	260	40÷70
	FAS 45.32(+W)											323.9	646	746	511	165	130	676	280	320	40÷70
	FAS 60.27(+W)	60	ODS 42	ODS 54	ODS 64	ODS 67	ODS 70	ODS 76	/			273	1147	1238	1019	140		1165	220	260	40÷73
	FAS 60.32(+W)								ODS 80			323.9	846	949	711	165		876	280	320	40÷73
	FAS 60.35(+W)											355.6	718	804	541	180		731	355	410	40÷73
	FAS 80.27(+W)	80	ODS 54	ODS 64	ODS 67	ODS 70	ODS 76	ODS 80	OD 88.9			273	1515	1606	1387	140		1533	220	260	50÷73
	FAS 80.32(+W)									ODS 28		323.9	1113	1216	978	165		1143	280	320	50÷73
	FAS 80.35(+W)											355.6	940	1026	763	180		953	355	410	50÷73
IV	FAS 100.32(+W)	100	ODS 54	ODS 64	ODS 67	ODS 70	ODS 76	ODS 80	OD 88.9	ODS 28	1" NPT	323.9	1380	1483	1245	165	130	1410	280	320	50÷73
	FAS 100.35(+W)											355.6	1162	1248	985	180		1175	355	410	50÷73
	FAS 125.40(+W)	125	ODS 64	ODS 67	ODS 70	ODS 76	ODS 80	OD 88,9	OD 114.3	ODS 35		406.4	1115	1205	932	200	160	1132	355	410	70÷73
	FAS 150.40(+W)	150											1327	1417	1144			1344	355	410	70÷73

NOTA: I dati riportati nel presente catalogo non costituiscono documenti contrattuali. *NOTE: Data indicated on the present catalogue are not contractually binding.*